Company: Joyoung International Trading Co.,Limited
Atten： Smiling
Mobile/WhatsApp/Wechat:+86 18050035902
Email: info@htechplc.com
Website: https://www.joyoungintl.com/

ABB MEASUREMENT & ANALYTICS | DATA SHEET | DS/SM500F-EN REV. AM

SM500F

Field mountable paperless recorder

Measurement made easy

Innovative, simple, reliable recording

Unique universal mounting capability
- wall-, pipe- or panel-mount
- ultra-slim design, ≤90 mm (3.5 in.) deep

Secure data recording
- 64 MB internal Flash memory
- archiving to SD memory card

21 CFR Part 11 compliant data security
- extensive physical and electronic security features

12 software recording channels for recording of:
- up to 7 analog/digital inputs
- math function results
- Modbus signals

Remote access and data retrieval
- Ethernet connectivity
- MODBUS RS485 connectivity

Install into the harshest of process environments
- protection to NEMA4X and IP66 standards

Batch recording
- easy tracking of batch processes

SM500F

The SM500F is a field-mountable paperless recorder. Its unique enclosure design enables wall-, pipe- or panel-mounting of the unit. Process data is displayed clearly to the local operator through a variety of display formats, including chart, bargraph and digital indicator displays. Additionally, process data is logged securely to the removable memory card. Ethernet communications provide convenient remote monitoring of the process and access to logged data.

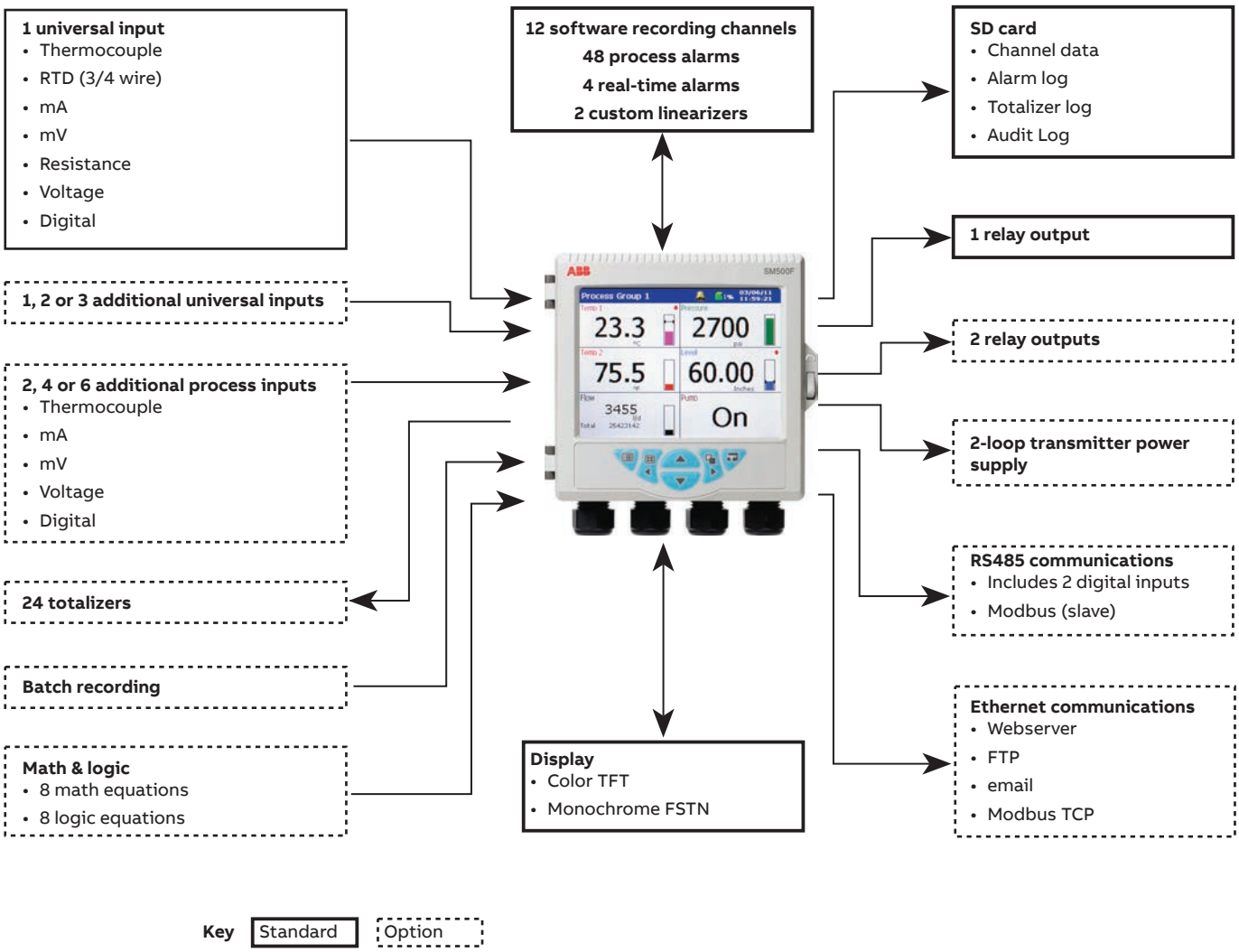

Key Standard Option

Unique enclosure

The SM500F is housed in a unique enclosure for a paperless recorder. 'Out of the box' it is possible to either wall- or panel-mount the device. The SM500F can also be pipe-mounted using the optional kit.

In any type of installation the SM500F's enclosure meets both IP66 and NEMA 4X hose-down standards. This means that the unit requires no costly additional enclosures or protection when mounted in applications that require frequent hose-down.

When panel-mounted the SM500F's ultra slim profile requires a panel depth of only 67 mm (2.7 in.). This ensures that there are no problems when replacing existing recording devices and enables the SM500F to be installed into existing panels where required.

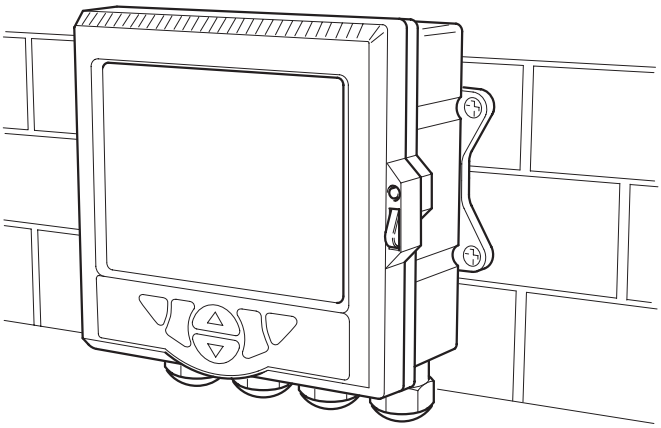

Wall-mount

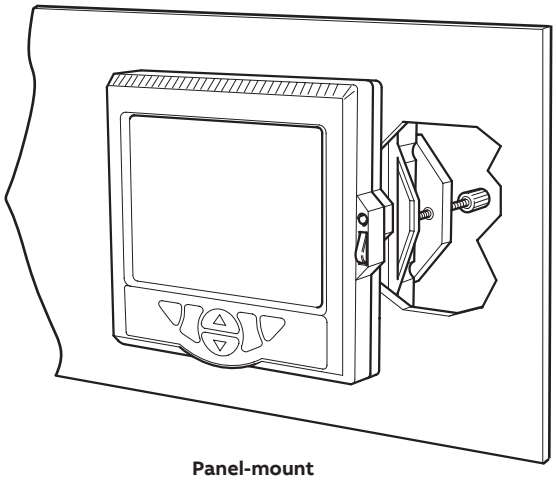

Panel-mount

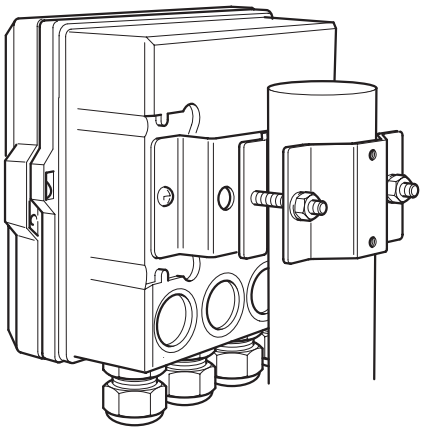

Vertical pipe-mount

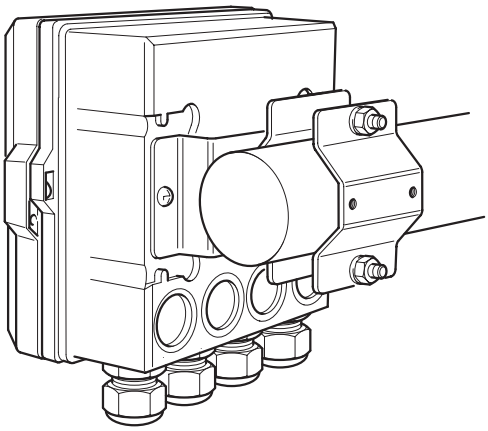

Horizontal pipe-mount

Innovative design enables multiple mounting options

Save time and money

The unique enclosure design of the SM500F enables it to be wall-mounted without the need for additional costly enclosures. To wall-mount a traditional paperless recorder, an additional enclosure must be sourced and a cut-out made to suit the recorder, glanded cable entries made and any internal wiring required for safety regulations installed and tested.

The work involved in producing such an enclosure increases costs and installation times significantly.

Flexible recording

12 software recording channels are featured in the SM500F as standard. Up to 7 physical analog/digital inputs can be fitted to the SM500F and assigned to a software recording channel. The remaining software recording channels can be used to record math block results, alarm status, signals communicated via Modbus or any other analog or digital signal available within the recorder. Each software recording channel features 4 process alarms and 2 optional totalizers.

High specification I/O

The SM500F features up to 4 fully universal inputs. Each input can be configured to accept a variety of process signals directly – including mA, mV, RTD (3- or 4-wire), thermocouple, voltage, resistance or digital signal. Process data can be logged at the high speed of 100 ms. All universal inputs have 500V channel-to-channel isolation.

Alternatively, the SM500F can be specified with 1 universal and 6 process inputs. Process inputs can accept mV, mA, thermocouple, voltage and digital inputs. Each process input pair is isolated by 500 V.

Included as standard is a relay output that can be driven from process alarms, memory card capacity warning or many other events. Two additional relays can be added if required.
The SM500F can be upgraded easily with additional I/O due to its modular design. When inserted, additional inputs or relay modules are recognized by the recorder and can then be configured ready for use.

Ease of use

Operation of the SM500F is performed via dedicated operator keys on the front panel. All operation and configuration is performed via intuitive Windows-style menus.

The SM500F includes context-sensitive online help that quickly assists the operator when required. This enables the SM500F to be installed quickly and configured without the use of the instruction manual.

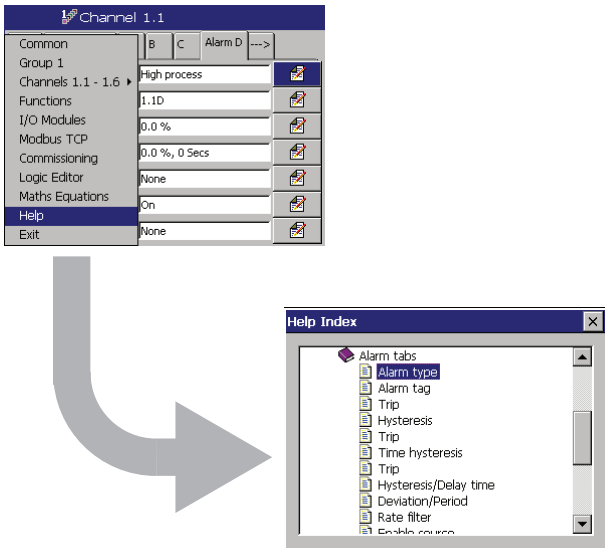

Comprehensive and intuitive on-line help system

21 CFR part 11 compliance and GAMP validation package

With its comprehensive audit trail, secure archiving format and extensive physical and configuration security features, the SM500F is ideally suited to applications where compliance to 21CFR part 11 (the FDA's regulations regarding electronic record keeping) is required (for further information refer to INF06/119).

In keeping with this, a template for validating the SM500F paperless recorder is available. Following GAMP 5 (a risk-based approach to compliant GxP computerized systems), the template is designed to make the validation process as simple as possible and provides an IQ and OQ that is completed at the customer site, before and after installation. Once completed, the template is then packaged together with other documentation relating to the system as a whole, ready to be presented to the governing regulatory body for inspection.

Extensive security features

The SM500F has extensive physical and electronic security features which ensure the integrity of the recorder's configuration and archived data. These features ensure the SM500F meets the requirements of 21 CFR Part 11.

- An optional door lock can be specified. When locked the recorder's SD card is protected from unauthorized access.
- The recorder's configuration can be password protected. Up to 12 users with individual passwords and access levels can be configured.
- To meet the requirements of regulatory bodies the configuration mode of the recorder can be locked by an internal security switch. This switch can then be protected by a tamper-evident seal providing physical evidence of the integrity of the recorder's configuration.
- Security of all process data archived to the SD card is always assured. Files stored in comma-separated variable format are attributed with an Encrypted Digital Signature and files stored in binary format are encoded securely with inbuilt integrity checks. Both data storage formats are compliant with FDA standard 21 CFR Part 11.

RS485 communications

Optional RS485 communications enable real-time data to be transferred to and from the SM500F using Modbus protocol. Ideal for receiving instantaneous data values from a master controller, data communicated via Modbus can be trended on-screen and securely archived to the SM500F's media card. The recorder's batch recording capability can also be controlled via Modbus providing a seamless link between the SM500F and the batch/process controller.

Ethernet communications

The SM500F can provide 10BaseT Ethernet communications via a standard RJ45 connector and uses industry-standard protocols TCP/IP, FTP and HTTP. The use of standard protocols enables easy connection into existing PC networks.

Data file access via FTP (file transfer protocol)

The SM500F features FTP server functionality. The FTP server in the recorder is used to access its file system from a remote station on a network. This requires an FTP client on the host PC. Both MS-DOS® and Microsoft® Internet Explorer version 5.5 or later can be used as an FTP client.

- Using a standard web-browser or other FTP client, data files contained within the SM500F's memory card can be accessed remotely and transferred to a PC or network drive.
- Four individual FTP users can be programmed into the SM500F. An access level can be configured for each user.
- All FTP log-on activity is recorded in the audit log of the SM500F.
- Using ABB's DataManager Pro software, data files from multiple recorders can be backed-up automatically to a PC or network drive for long-term storage, ensuring the security of valuable process data and minimizing the operator intervention required.

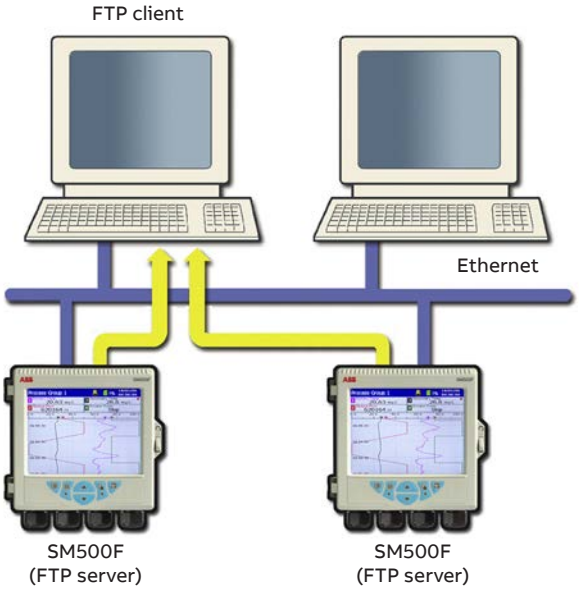

Embedded web server

Contained within the SM500F is an embedded web-server that provides access to web pages created within the recorder. The use of HTTP (Hyper Text Transfer Protocol) enables standard web browsers to view these pages.

- Presented within the web pages is the current display of the recorder, detailed information on process signals, alarm conditions, totalizer values and other key process information.
- The historical logs stored in the SM500F's internal buffer memory can be displayed in full form within the web pages.
- Operator messages can be entered via the web server enabling comments to be logged to the recorder.
- All of the information displayed on the web pages is refreshed regularly enabling them to be used as a process supervision tool.
- The recorder's configuration can be switched to a different configuration. This can be an existing configuration in the internal memory or a new configuration file transferred to the recorder via FTP.
- The recorder's real-time clock can be set via the web server. Alternatively, the clocks of multiple recorders can be synchronized using FTS (File Transfer Scheduler).

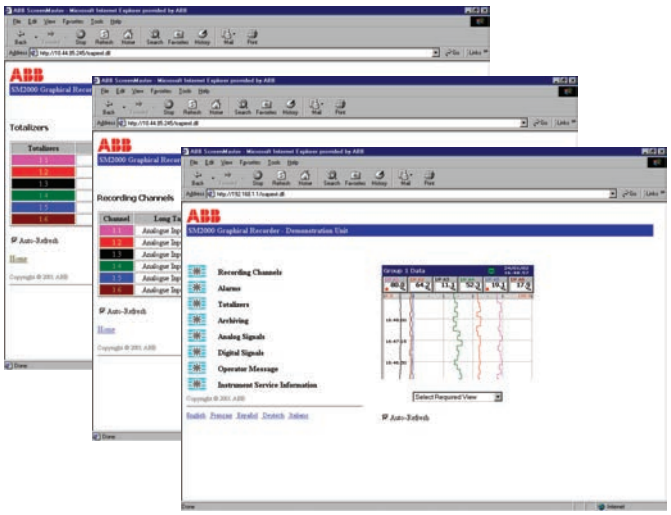

On-line demonstration

A demonstration of these features is available from an on-line recorder accessible via the internet. In the address bar of your web browser enter 'http://217.46.239.73'.

Email notification

Via the SM500F's inbuilt SMTP client the recorder is able to email notification of important events. Emails triggered from process alarms or other critical process events can be sent to multiple recipients. The recorder can also be programmed to email reports of the current process status at specific times during the day, the content of which can be tailored to suit your specific process needs.

Remote access and monitoring

Ethernet communications can provide a link to recorders installed in remote locations. Via the use of a dial-up router an SM500F can be installed in a remote location and accessed via a public telephone network when required.

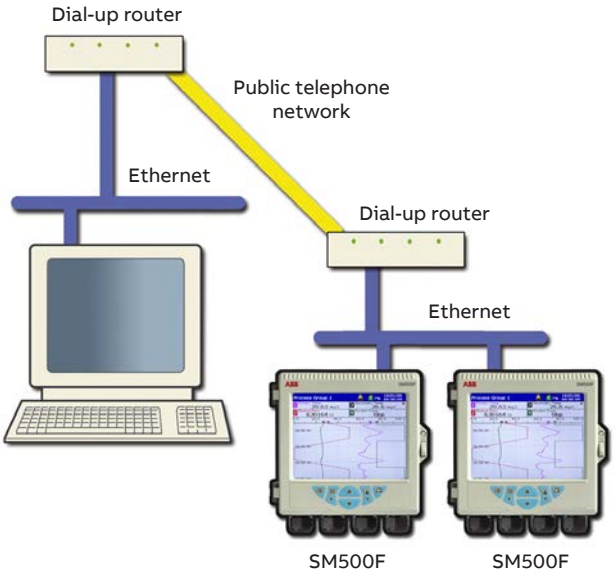

Powerful operator displays

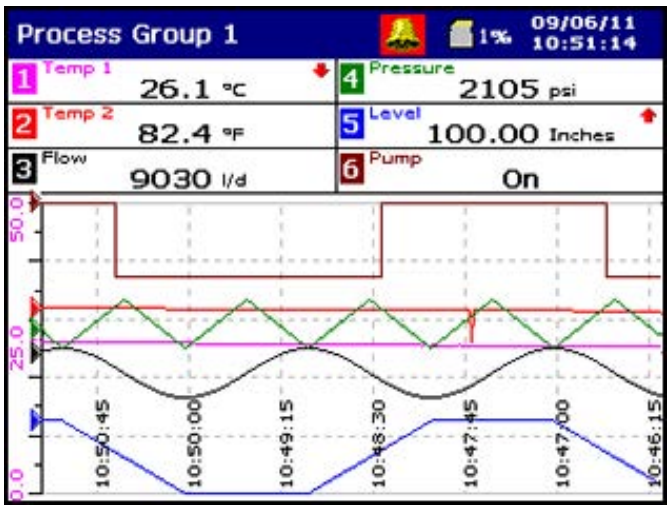

Horizontal chart display

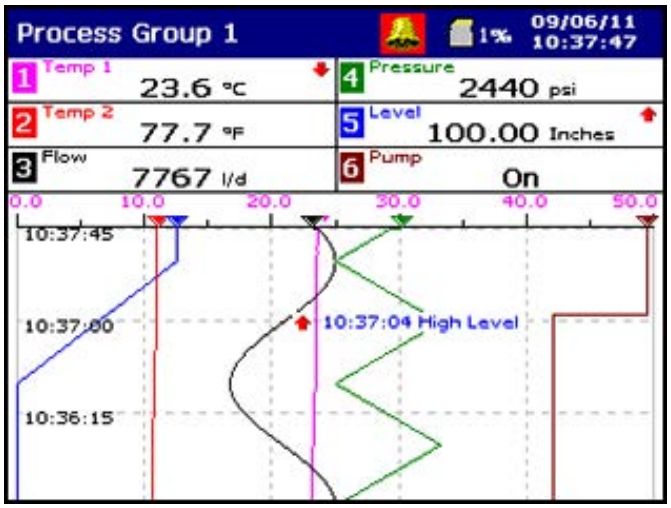

Vertical chart display

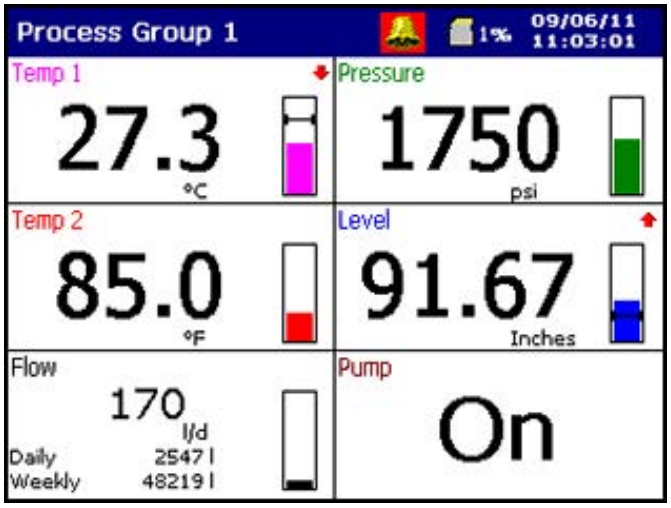

Digital display

DataManager Pro off-line review and analysis

Using ABB's DataManager Pro software, archived process data and historical logs recorded to a removable media card can be reviewed easily.

- Database management of data files provided by DataManager Pro ensures simple, secure, long-term storage and retrieval of historical data.
- The graphing capabilities provided by DataManager Pro ensure easy interrogation of process data.
- The validity of all data files is always checked by DataManager Pro during the storage and retrieval process, ensuring maximum data integrity.

For further information on the capabilities of DataManager Pro, refer to data sheet DS/RDM500–EN.

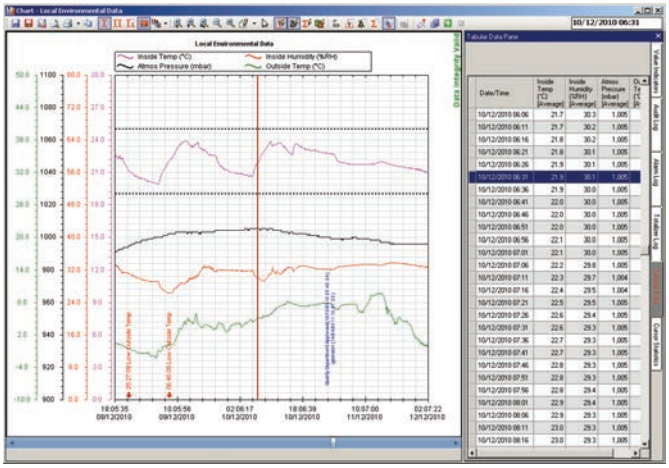

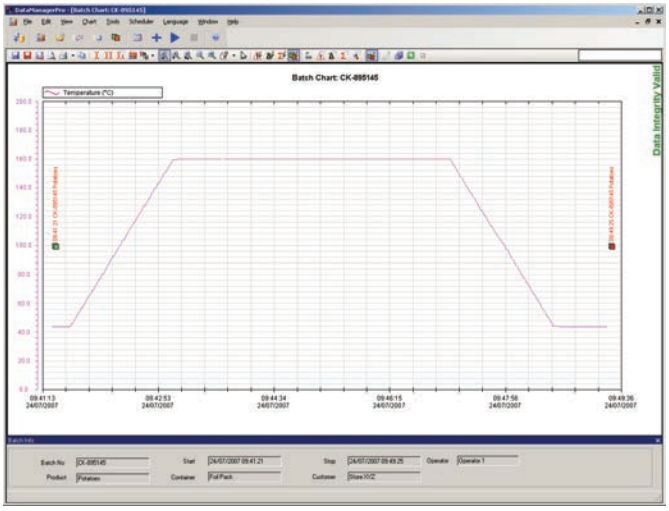

Software options

Totalizers
Multi-function totalizers are available as an option. Each software recording channel has 2 totalizers that enable resettable and cumulative totals to be displayed simultaneously.

Totalizers can be configured to:

- calculate flow inputs from analog inputs
- count low frequency digital pulses
- calculate F0 sterilization values

Math & Logic
Advanced math and logic capabilities are available as an option. 8 multi-element math and 8 multi-element logic equations can be configured. Equations can be nested into each other to provide extensive capabilities.

- Mean, standard deviation and rolling averaging functions are provided.
- Standard addition, subtraction, multiplication and division are complemented with Log, Ln, Square root, power, Sin, Cos, Tan and absolute functions.
- Switching of process signals can be achieved via the high/low/middle signal selection and multiplexing functions.
- Predefined equations are provided for relative humidity and F0 measurements.
- AND, NAND, OR, NOR, XOR and NOT operators are available within the logic equations.

All math and logic equation results can be shown on the display of the SM500F and archived to the removable media. Detailed diagnostic functions are provided for both the math and logic equations.

Using the SM500F's math functionality, the British Thermal Unit (BTU) consumption of energy in a water flow can be calculated. In addition to being displayed on screen, the BTU value can be totalized and regularly recorded in the totalizer log (for example, on a daily, weekly or monthly basis).

The SM500F can accept 4-wire RTD inputs directly, ensuring maximum accuracy of the measured temperatures. For further information refer to Technical Description TD/RandC/025-EN.

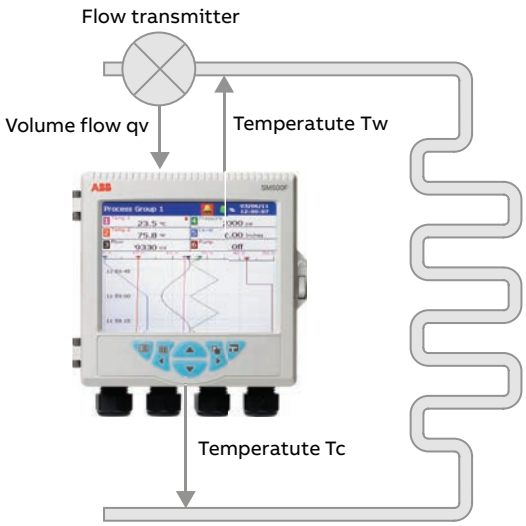

Batch Recording
A batch recording option enables simple recording and reviewing of batch processes. When a batch is started it is tagged with a unique batch number, operator identification and three user-definable description fields. All information is entered on-screen with a history function allowing quick entry of commonly repeated descriptions.

Using DataManager Pro, batches can be simply and quickly traced for review using the unique batch number and description information entered at the time of recording. Additional functionality provides the ability to search and sort batch records for an entire production facility in many ways, including by product type, operator and time and date of processing.

Specification

Operation and configuration

Configuration

- Via tactile membrane keys on front panel or PC Configuration
- Multiple configuration files can be stored in internal (up to 16 files) or external memory (with removable media option fitted)

Security

Physical

Optional lock on door

Configuration security

Password protection

Access to configuration is allowed only after the user has entered a password

Internal switch protection

Access to configuration is allowed only after a hardware switch has been set. This switch is situated behind a tamper-evident seal

Logging security

Configuration

Can be configured for password protection or free access to logging levels

Basic type security

4 individual users with unique usernames and passwords

Advanced type security

Number of users

Up to 12

Usernames

Up to 20 characters. Usernames are unique (names cannot be repeated)

Access privileges

- Logging access: yes/no
- Configuration access: none/load file only/limited/full

Passwords

- Up to 20 characters
- A minimum required password length of 4 to 20 characters can be configured and a password expiry time can be applied to eliminate password ageing

Password failure limit

- Configurable for 1 to 10 consecutive occasions or 'infinite'
- A user is deactivated if a wrong password is entered repeatedly

Deactivation of inactive users

- Can be disabled or configured for 7, 14, 30, 60, 90, 180 or 360 days of inactivity
- Users are deactivated (by removal of access privileges) after a period of inactivity

Custom linearization

Number

2

Number of breakpoints

20 per linearizer

Operator messages

Number

24

Trigger

Via front panel or digital signals

Recording in alarm/event log

Can be enabled or disabled on configuration

Display

Color TFT, liquid crystal display (LCD) with built-in backlight and contrast adjustment

Diagonal display area

144 mm (5.7 in.)

76800 pixel display*

* A small percentage of the display pixels may be either constantly active or inactive. Max. percentage of inoperative pixels <0.01%.

Language

English, German, French, Italian, Spanish, Portuguese, Chinese and Dutch

Dedicated operator keys

- Group select/left cursor
- View select/right cursor
- Menu key
- Up/Increment key
- Down/Decrement key
- Enter key

Chart screen intervals

Selectable from 18 s to 7 days

Chart divisions

Programmable for up to 10 major and 10 minor divisions

Chart annotation

- Alarm and operator messages may be annotated on the chart
- Icons to identify the type of event, time of occurrence and tag are displayed

Process alarms

Number

48 (4 per recording channel)

Types

- High/Low process, latch & annunciator
- Rate – fast/ slow

Tag

20-character tag for each alarm

Hysteresis

Programmable value and time hysteresis (1 to 9999 s)

Alarm enable

Allows alarm to be enabled/disabled via a digital input

Alarm log enable

Recording of alarm state changes in the alarm/event log can be enabled/disabled for each alarm

Acknowledgement

Via front panel keys or digital signals

Real-time alarms

Number

4

Programmable

Day of the week, 1st of month, start and duration times

Recording to internal memory

Data channels

Internal buffer memory

- 64 MB Flash memory provides storage for 16 million samples
- Oldest data is overwritten automatically by new data when memory is full

Data integrity checks

Checksum for each block of data samples

Independent process groups

2

No. of recording channels

6 per group

Sources

Analog inputs, MODBUS™ inputs, any digital signal, math block

Filters

Programmable for each channel to allow recording of: instantaneous values, average, max., min. and max. & min. value over sample time

Primary/Secondary sample rates

Programmable from 0.1 s to 12 hours for each process group

Primary/Secondary sample rate selection

Via any digital signal or from password protected menu

Recording start/stop control

Via any digital signal or from password-protected menu

Recording duration

Approximate duration calculated for continuous recording of 4 channels of analog data (for 8 channels divide by 2, for 2 channels multiply by 2 etc.)

Sample rate	1 s	10 s	40 s	60 s	120 s	480 s
64 MB internal Flash buffer memory	48 days	16 months	5 years	8 years	16 years	56 years

Archiving to removable media

Removable storage media options

SD Card

Data that can be saved to removable media

- Recorded data for group 1 & 2 channels
- Alarm event log data
- Totalizer log data
- Audit log data
- Configuration
- Screen capture images

File structure

Configurable as either binary-encoded or comma-separated

Filename

20-character tag, prefixed with date/time

Data verification

Carried out automatically on all writes to removable-media files

Card compatibility

ABB recorders comply with approved industry standards for memory cards and ABB fully tests any memory card they supply for compatibility with this device. Other cards not supplied by ABB may not be fully compatible with this device and therefore may not function correctly.

Card size

Cards up to 2 GB capacity may be used

Recording duration

Approximate duration calculated for continuous recording of 4 channels of analog data
(for example , for 8 channels divide by 2, for 2 channels multiply by 2)

Binary encoded file

Sample rate	1s	10s
128 MB SD	3 months	2.5 years
256 MB SD	6 months	5 years
512 MB SD	12 months	10 years
1 GB SD	2 years	20 years

Comma-separated file

Sample rate	1s	10s
128 MB SD	28 days	9 months
256 MB SD	8 weeks	19 months
512 MB SD	16 weeks	3 years
1 GB SD	7 months	6 years

...Specification

Historical logs

Types

Alarm/Event, totalizer and audit logs

No. of records in each historical log

- Up to 200 in internal memory
- Oldest data is overwritten automatically by new data when log is full

Log type	Alarm/Event log		Totalizer log		Audit log	
Log entry events	Alarm state changes Operator messages		User-defined logging intervals Totalizer stop/start, reset, wrap Power up/down		Configuration/calibration changes System events Errors, operator actions	
	In log	On screen	In log	On screen	In log	On screen
Information recorded in log						
Date & time of event	✔	✔	✔	✔	✔	✔
Type of event	✔	✔	✔	✔	✔	✔
Tag	✔	✔	✔	✔	–	–
Source tag	✔	–	✔	–	–	–
Alarm trip value & units of measure	✔	–	–	–	–	
Alarm state	✔	✔	–	–	–	–
Alarm acknowledgement state	✔	–	–	–	–	–
Operator ID	✔	–	–	–	✔	✔
Description	–	–	–	–	✔	✔
Batch total and units of measurement*	–	✔	✔	–	–	–
Max., min. and average values plus units*	–	✔	✔	–	–	–
Secure total	–	–	✔		–	–

* If Totalizer option is enabled and selected

Analog/Digital inputs

General

Number of inputs

7 (1 as standard, up to 6 optional)

Input types

mA, mV, voltage, resistance, THC, 3-wire RTD, 4-wire RTD, volt-free digital, 24 V DC digital*

Thermocouple types

B, E, J, K, L, N, R, S, T

Resistance thermometer

PT100

Other linearizations

$\sqrt{x}$, $x^{3/2}$, $x^{5/2}$, custom linearization

Digital filter

Programmable 0 to 60s

Display range

–99999 to +999999

Common mode noise rejection

>120 dB at 50/60 Hz with 300 Ω imbalance resistance

Normal (series) mode noise rejection

>60 dB at 50/60 Hz

CJC rejection ratio

0.05 °C/°C

Sensor break protection

Programmable as upscale or downscale

Temperature stability

0.02 %/°C or 2 µV/°C

Long term drift

<0.2 % of reading or 20 µV annually

Input impedance

- >10 MΩ (millivolts inputs)
- >10 MΩ (voltage inputs)
- 44 Ω (mA inputs)

Analog to digital converter resolution

16 bit

...Analog/Digital inputs

Standard analog input modules

Linear inputs	Standard analog input	Accuracy (% of reading)
Millivolts	0 to 150 mV	0.1 % or ±20 µV
Milliamps	0 to 50 mA	0.2 % or ±4 µA
Volts	0 to 25 V	0.2 % or ±1 mV
Resistance Ω (low)*	0 to 550 Ω	0.1 % or ±0.1 Ω
Resistance Ω (high)*	0 to 10 kΩ	0.1 % or ±0.5 Ω
Digital input specification	Switching threshold 4 V – min. pulse width of on or off state 200 ms	
Sample interval	Universal input module – 100 ms per sample Dual process input) module – 200 ms per sample	
Input isolation	Universal input module – 500 V DC channel-to-channel Dual (process input) module – none	
Isolation from rest of instrument	Galvanically isolated to 500 V DC	

* Resistance/RTD not available on dual (process input) module.

Analog input types

Thermocouple	Maximum range °C	Maximum range °F	Accuracy (% of reading)
B	–18 to 1800	0 to 3270	0.1 % or ±2 °C (3.6 °F) (above 200 °C [392 °F]) *
E	–100 to 900	–140 to 1650	0.1 % or ±0.5 °C (0.9 °F)
J	–100 to 900	–140 to 1650	0.1 % or ±0.5 °C (0.9 °F)
K	–100 to 1300	–140 to 2350	0.1 % or ±0.5 °C (0.9 °F)
L	–100 to 900	–140 to 1650	0.1 % or ±1.5 °C (2.7 °F)
N	–200 to 1300	–325 to 2350	0.1 % or ±0.5 °C (0.9 °F)
R	–18 to 1700	0 to 3000	0.1 % or ±1 °C (1.8 °F) (above 300 °C [540 °F]) *
S	–18 to 1700	0 to 3000	0.1 % or ±1 °C (1.8 °F) (above 200 °C [392 °F]) *
T	–250 to 300	–400 to 550	0.1 % or ±0.5 °C (0.9 °F) (above –150 °C [–238 °F]) *

* For B, R, S and T thermocouples, accuracy is not guaranteed below the value stated.

RTD	Maximum Range °C	Maximum Range °F	Accuracy (% of reading)
PT100	–200 to 600	–325 to 1100	0.1 % or ±0.5 °C (0.9 °F)

Relays

Number of relays

1 as standard, 2 optional, (1 module)*

* When using dual relay option boards, high voltages above 120 V AC must not be connected alongside low voltage DC supplies.

Type and rating

Relay type

Selectable NO/NC

Voltage

250 V AC 30 V DC

Current

5 A AC 5 A DC

Loading (non-inductive)

1250 VA 150 W

For dual relay boards, only the following permutations are permitted.

- 30 V DC/30 V DC
- 120 V AC/30 V DC
- 120 V AC/120 V AC
- 240 V AC/240 V AC
- 240 V AC/120 V AC

AC supplies must be on the same phase.

2-wire transmitter power supply (optional)

Number

2 isolated supplies

Voltage

24 V DC nominal

Drive

22 mA (each supply)

Ethernet module (optional)

Physical medium

10BaseT

Protocols

TCP/IP, FTP (server), HTTP, SMTP, Modbus TCP (client + server)

FTP server functions

- Directory selection & listing
- File upload/download
- 4 independently configurable users with full or read-only access

Web server functions

- Operator screen monitoring/selection.
- Remote monitoring of recording channels, analog/digital signals, alarms, totalizers and archiving.

SMTP client compatibility

Compatible with MS Exchange versions up to and including MS Exchange 2003

...Specification

Modbus/Digital input module (optional)

Modbus

Physical medium
2-wire RS485

Protocol
RTU

Baud rates
1200, 2400, 4800, 9600, 88400, 115200

Parity
None, odd, even

Digital input

Number
2

Digital input types
Volt-free/24 V (automatic)

Polarity
User-configurable

Totalizer (optional)

Number
2 per recording channel, 10-digit totals

Type
Analog, digital, F0

Statistical calculations
Average, maximum, minimum (for analog signals)

Advanced math (optional)

Type
8 equations provide ability to perform general arithmetic calculations including F0, mass flow (of ideal gases), relative humidity and emissions calculations

Size
40-character equation

Functions
+, –, /, log, Ln., Exp, X^n, √, Sin, Cos, Tan, mean, rolling average, standard deviation, high/median/low select, multiplexer, absolute, relative humidity

Tags
8- and 20-character tags for each block

Update rate
1 enabled math block is updated every 100 ms

Logic equations (optional)

Number
8

Size
11 elements each

Functions
AND, OR, NAND, NOR, XOR, NOT

Tags
20-character tag for each equation

Update rate
300 ms

EMC

Emissions & immunity
Meets requirements of IEC61326 for an industrial environment

Electrical

Supply ranges
- 100 to 240 V AC ± 10 % (90 V min. to 264 V max.) or 105 V DC min. to 115 V DC max.
- 10 to 36 V DC (optional)

Power consumption
10 W max.15 VA max.

Power interruption protection
No effect for interrupts of up to 20 ms

Safety

General safety
- EN61010-1
- Overvoltage Class III on mains, Class II on inputs and outputs
- Pollution category 2
- CSA 61010-1
- UL 61010-1

Isolation
500 V DC to earth (ground)

Environmental

Operating temperature range
–10 to 50 °C (14 to 122 °F)

Operating humidity range
5 to 95 %RH (non-condensing)

Storage temperature range
–20 to 70 °C (–4 to 174 °F)

Enclosure sealing
IP66 and NEMA4X (the enclosure meets the requirements of the NEMA 4X hosedown test)

Vibration
Conforms to EN60068–2–6

Altitude
2000 m (6562 ft) max. above sea level

Physical

Size
144 x 144 x 84 mm (5.7 x 5.7 x 3.3 in.)

Weight
1.0 kg (2.2 lb) approx. (unpacked)

Panel cutout
138 mm x 138 mm (5.43 x 5.43 in.) x 67 mm (in.) behind panel

Case material
Glass-filled polycarbonate

Operator keypad
Tactile membrane keys

No. of keys
6

Cable gland entries
4 x 22.2 mm (0.87 in.) o.d. entries for ½ in. NPT glands

Electrical connections

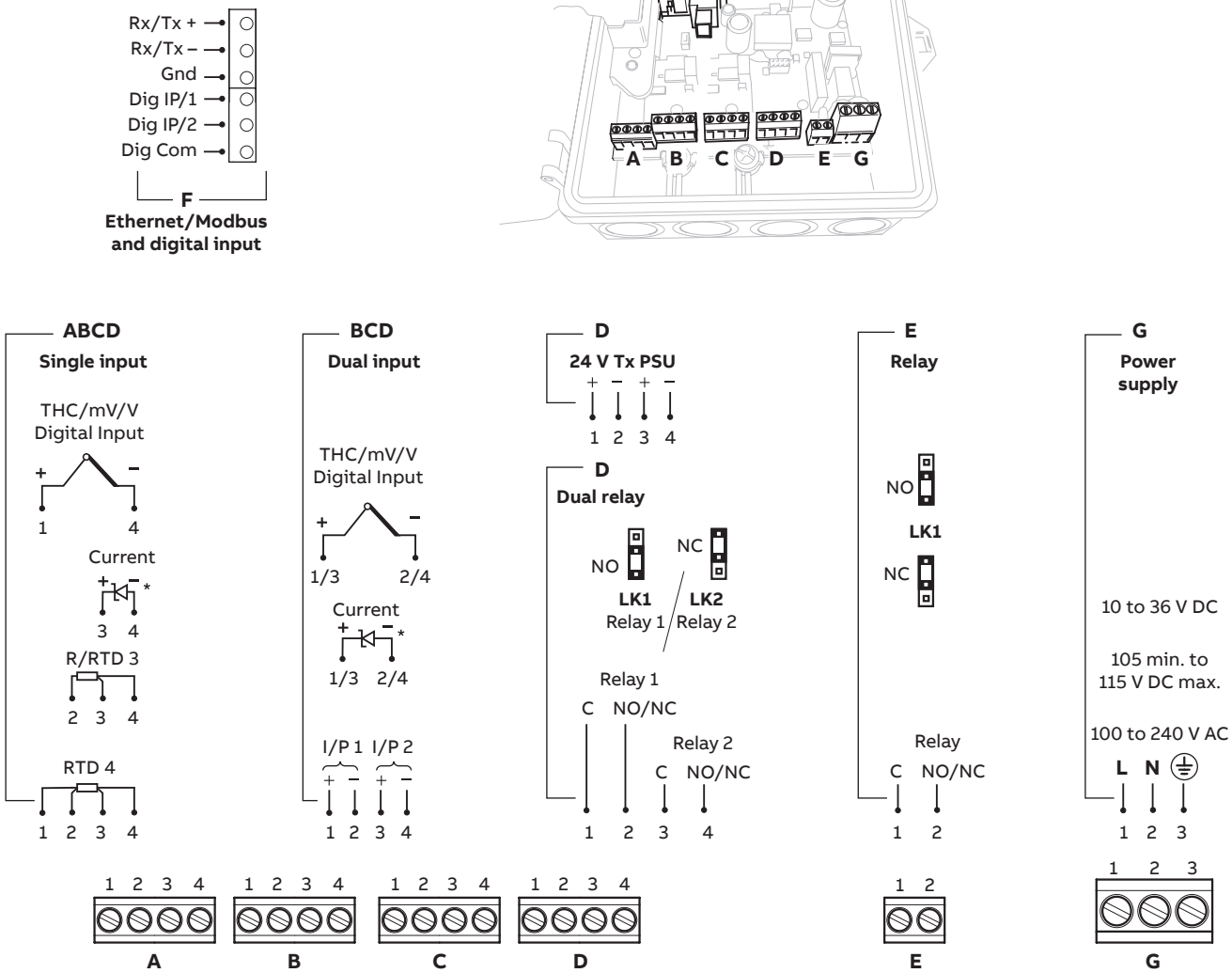

* In the powered-down condition the current input is open circuit.
In order to maintain a current loop when the recorder is powered down, fit a zener diode (BZX79 – B/C2V4) to the input as shown.

Overall dimensions

Dimensions in mm (in.)

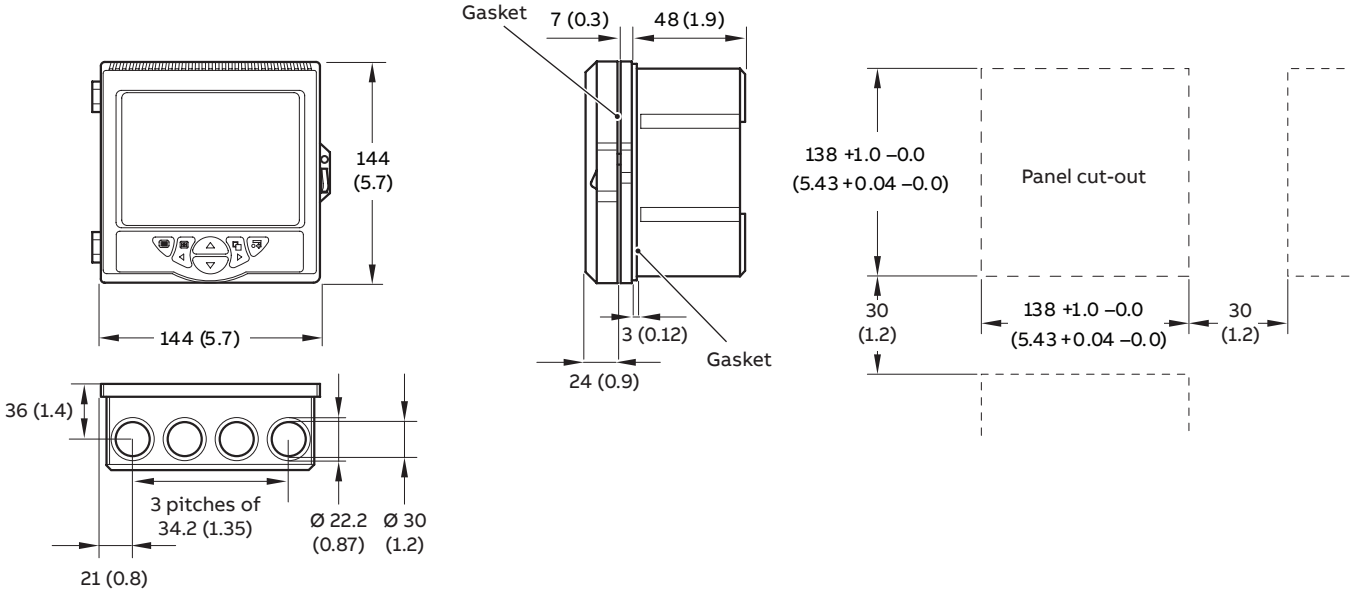

Ordering information

Field mountable paperless recorder	**SM50**	**X**	**X**	**X/**	**X**	**X**	**X**	**X**	**X**	**X**	**X**	**X/**	**XXX**
Channels													
One analog/digital input (1 x universal)		1											
Two analog/digital inputs (2 x universal)		2											
Three analog/digital inputs (3 x universal)		3											
Four analog/digital inputs (4 x universal)		4											
Four analog/digital inputs (2 x universal, 1 x dual)		A											
Five analog/digital inputs (1 x universal, 2 x dual)		B											
Five analog/digital inputs (3 x universal, 1 x dual)		C											
Six analog/digital inputs (2 x universal, 2 x dual)		D											
Seven analog/digital inputs (1 x universal, 3 x dual)		E											
Mounting													
Field/Panel			F										
Display type													
Color				C									
Electrical code													
Standard					B								
UL					U								
CSA					C								
Software option													
None						0							
Math & logic						1							
Totalizers						2							
Math, logic & totalizers						3							
Batch						4							
Batch & totalizers						5							
Batch & math & logic						6							
Batch & math & logic & totalizers						7							
Communications													
None							0						
Ethernet 10BaseT							E						
RS485 Modbus & 2 x digital I/P							S						
Optional output module													
None								0					
2 Relays [1]								R					
Transmitter power supply [1]								T					
Power supply													
90 to 264 V AC									0				
10 to 36 V DC									1				
Gland entry type													
None – 4 x blanking plug supplied										0			
4 x standard (½ in. NPT) supplied [2]										1			
3 x standard (½ in. NPT) and 1 x Ethernet supplied [3]										2			
Door lock													
None											0		
Fitted											1		
Language													
English												E	
German												G	
French												F	
Italian												I	
Spanish												S	
Portuguese												P	
Chinese												C	
Dutch												D	
Special features													
Standard													STD
Custom configuration (customer to complete and supply SM500F custom configuration sheet – INF08/033)													CUS
Special													SPXX
GAMP validation compatible recorder [4]													VAL
Engineered configuration (customer to supply configuration details required)													ENG
Calibration certificate													C1
Printed instruction manual													
English													M5
German													M1

[1] Not available with channel options 4, C, D and E
[2] Available only if Ethernet communication is not specified
[3] Available only if Ethernet is specified
[4] Recorder supplied preconfigured to customer's requirements, together with calibration and conformity certificates. Configuration must be supplied using custom configuration sheet – INF08/033.

Standard accessories

Included with each recorder:

- Wall/Panel mounting clamps
- SD memory card

Optional accessories

2 GB SD card	B12469
USB SD memory card reader	B12028
DataManager Pro software	RDM500–CD
DataManager Pro single user license	RDM500L
DataManager Pro multi-user license	RDM500ML
Pipe-mounting kit	SM500/0703
Validation package template	CD/VALSM500F
After-sales engineered configuration service	ENG/REC

Acknowledgements and trademarks

Modbus is a registered trademark of the Modbus-IDA organization.

Microsoft is a registered trademark of Microsoft Corporation in the United States and/or other countries.

Sales

Service

Software

—

ABB Measurement & Analytics

For your local ABB contact, visit:
www.abb.com/contacts

For more product information, visit:
www.abb.com/measurement

—
We reserve the right to make technical changes or modify the contents of this document without prior notice. With regard to purchase orders, the agreed particulars shall prevail.
ABB does not accept any responsibility whatsoever for potential errors or possible lack of information in this document.

We reserve all rights in this document and in the subject matter and illustrations contained therein.
Any reproduction, disclosure to third parties or utilization of its contents – in whole or in parts – is forbidden without prior written consent of ABB.

© 2021 ABB
All rights reserved

3KXR100501R1001

DS/SM500F-EN Rev. AM 07.2021